Regulator 24–VK1

24–T201–4G–E
28–09–10

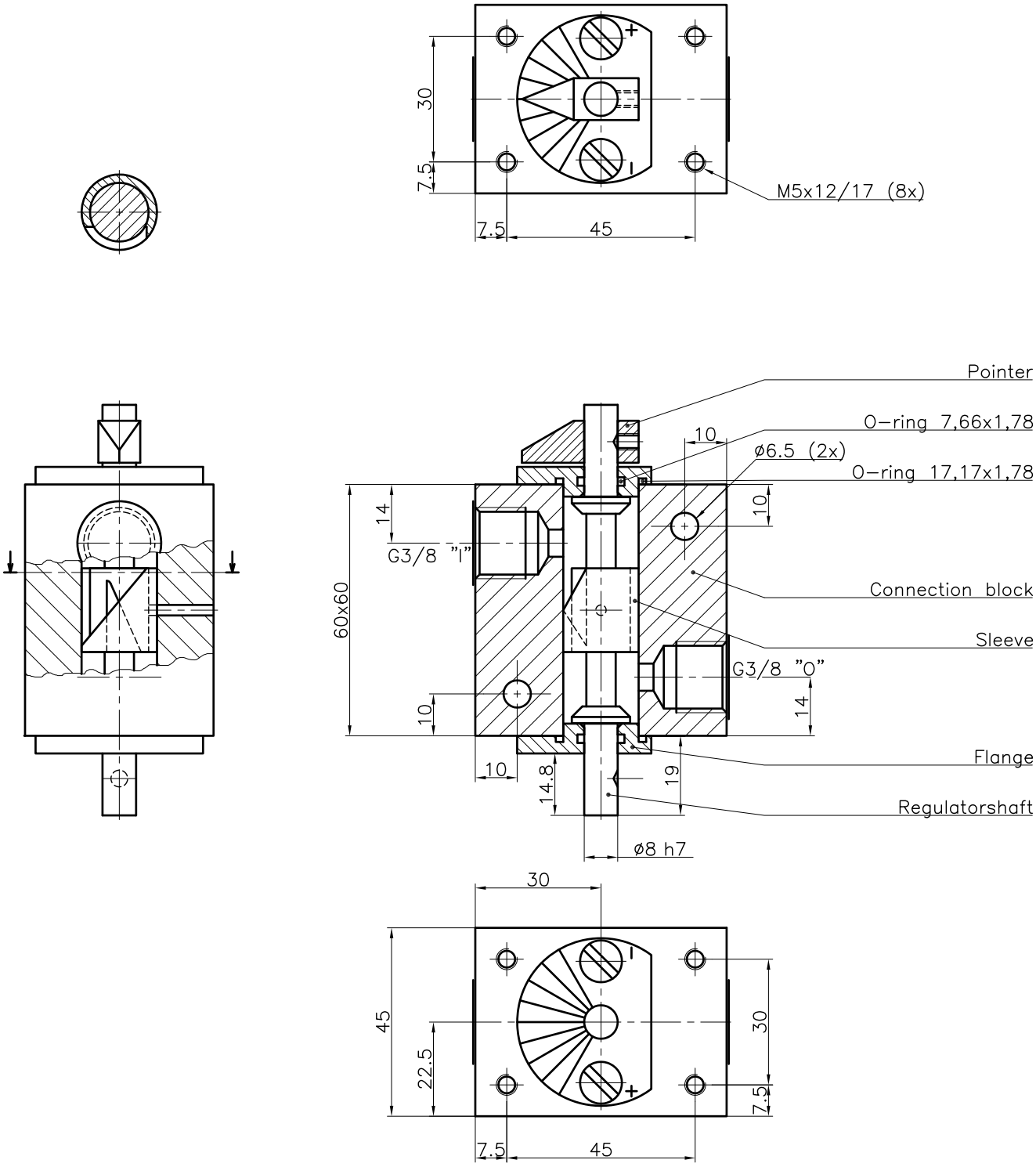

© Fluidics Instruments BV